Frymaster®

We Fit the Way You Fry™

BIELA14-T Series

Gen III LOV™ Electric Fryer

Wiring Diagrams

This manual is updated as new information and models are released. Visit our website at www.frymaster.com for the latest manual. This equipment chapter is to be installed in the Fryer Section of the *Equipment Manual*.

LOV Low Oil Volume Fryer

Part Number: FRY_D_8197343 05/2025

WELBILT an Ali Group Company

⚠ DANGER

Improper installation, adjustment, maintenance or service, and unauthorized alterations or modifications can cause property damage, injury, or death. Read the installation, operating, and service instructions thoroughly before installing or servicing this equipment.

⚠ DANGER

This fryer has a power cord (three-phase) for each frypot and may have a single five-wire cord for the entire system. Prior to movement, testing, maintenance and any repair on your Frymaster fryer; disconnect ALL electrical power cords from the electrical power supply.

BIELA14-T SERIES GEN III LOV™ ELECTRIC FRYER
Table of Contents

SECTION 1: Wiring Diagrams

1.1 BIELA14-T Series GEN III LOV™ Domestic, Non-CE Wiring - Current 1-1
1.1.B BIELA14-T Series GEN III LOV™ Domestic, Non-CE Wiring – Prior to 07/2022 1-2
1.1.1 BIELA14-T Series GEN III LOV™ CUL Wiring - Current 1-3
1.1.1.B BIELA14-T Series GEN III LOV™ CUL Wiring – Prior to 07/2022 1-4
1.1.2 BIELA14-T Series GEN III LOV™ CE Wiring - Current 1-5
1.1.2.B BIELA14-T Series GEN III LOV™ CE Wiring – Prior to 07/2022 1-6
1.1.3 BIELA14-T Series GEN III LOV™ Australia Wiring - Current 1-7
1.1.3.B BIELA14-T Series GEN III LOV™ Australia Wiring – Prior to 07/2022 1-8
1.1.4 BIELA14-T Series GEN III LOV™ Wiring Export 208V w/208V Controls 1-9
1.1.5 BIELA14-T Series GEN III LOV™ Non-CE Solid Shortening Wiring 1-10
1.1.5.B BIELA14-T Series GEN III LOV™ CE Solid Shortening Wiring No Melter Prior to 01/2024 1-11
1.1.6 BIELA14-T Series GEN III LOV™ CE Solid Shortening Wiring No Melter Current 1-12
1.1.7 BIELA14-T Series GEN III LOV™ Japan 2-Bat Solid Short Wiring No Melter .. 1-13
1.2 BIELA14-T Series GEN III LOV™ Simplified Communication Wiring 1-14
1.3 Contactor Box-Delta Configuration 1-15
1.4 Contactor Box-WYE Configuration 1-16
1.5 Solid Shortening Melting Unit Wiring 1-17
1.5.1 Solid Shortening Melting Unit Wiring (2 Battery) 1-18
1.6 Solid Shortening Melting Unit Wiring No Melter (2 Battery) 1-19
1.7 Solid Shortening Melting Unit Wiring No Melter (3-Battery) 1-20
1.8 Solid Shortening Melting Unit Wiring (3-Battery) 1-21

BIELA14-T SERIES GEN III LOV™ ELECTRIC FRYER
SECTION 1: WIRING DIAGRAMS

1.1 BIELA14-T Series GEN III LOV™ Wiring Domestic US – Current

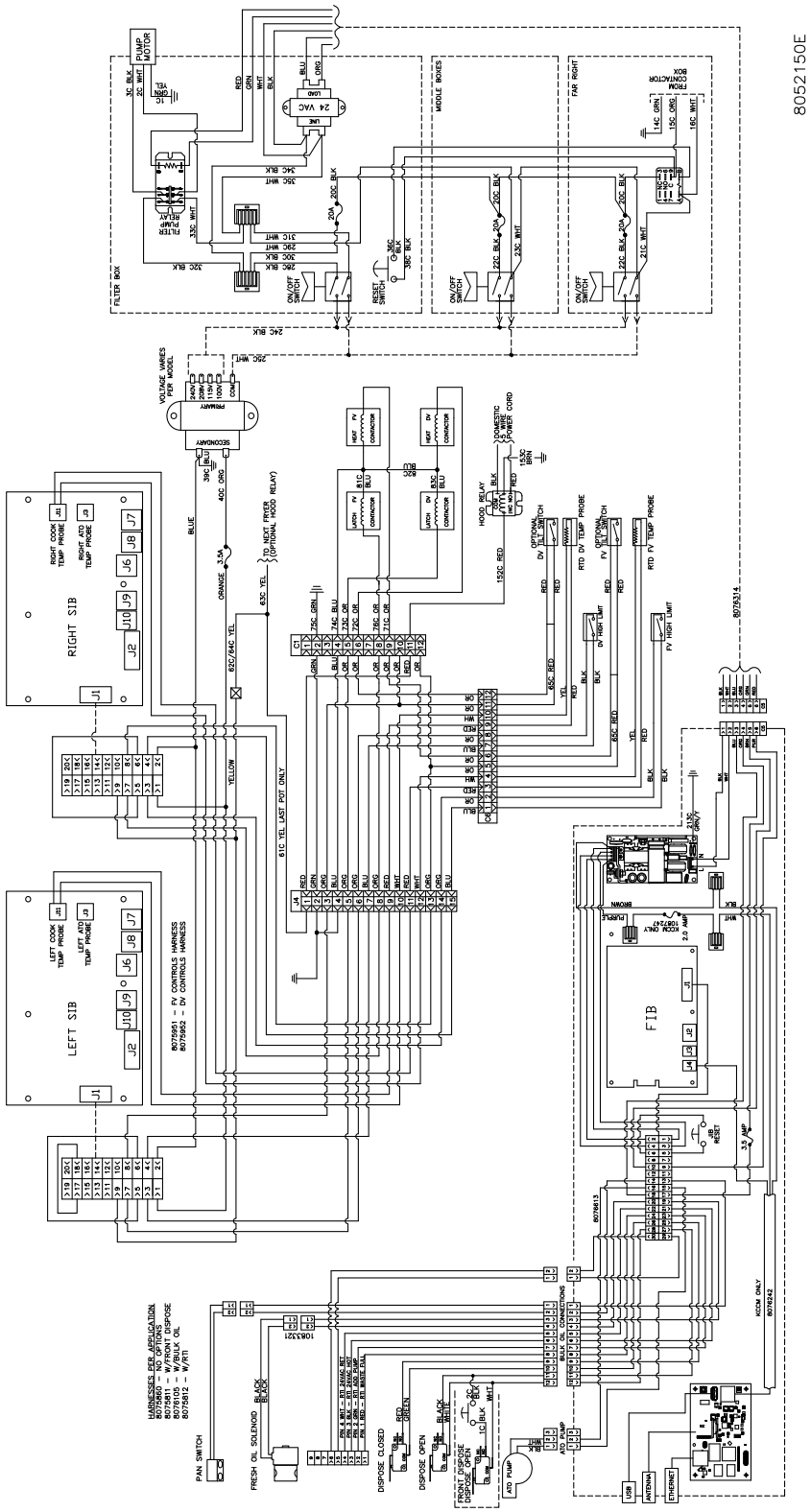

1.1.B BIELA14-T Series GEN III LOV™ Wiring Domestic US – Prior to 07/2022

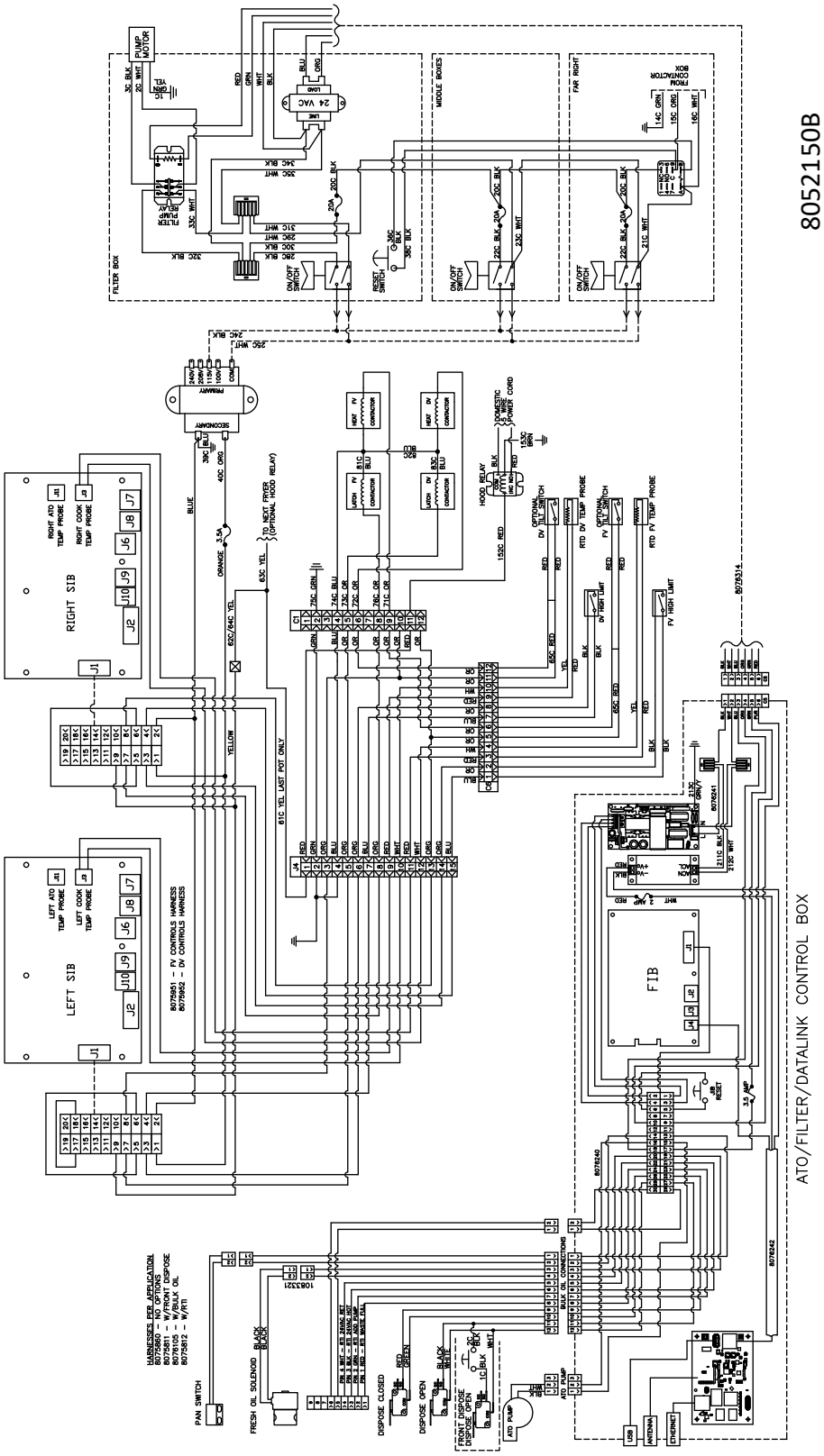

1.1.1 BIELA14-T Series GEN III LOV™ Wiring CUL – Current

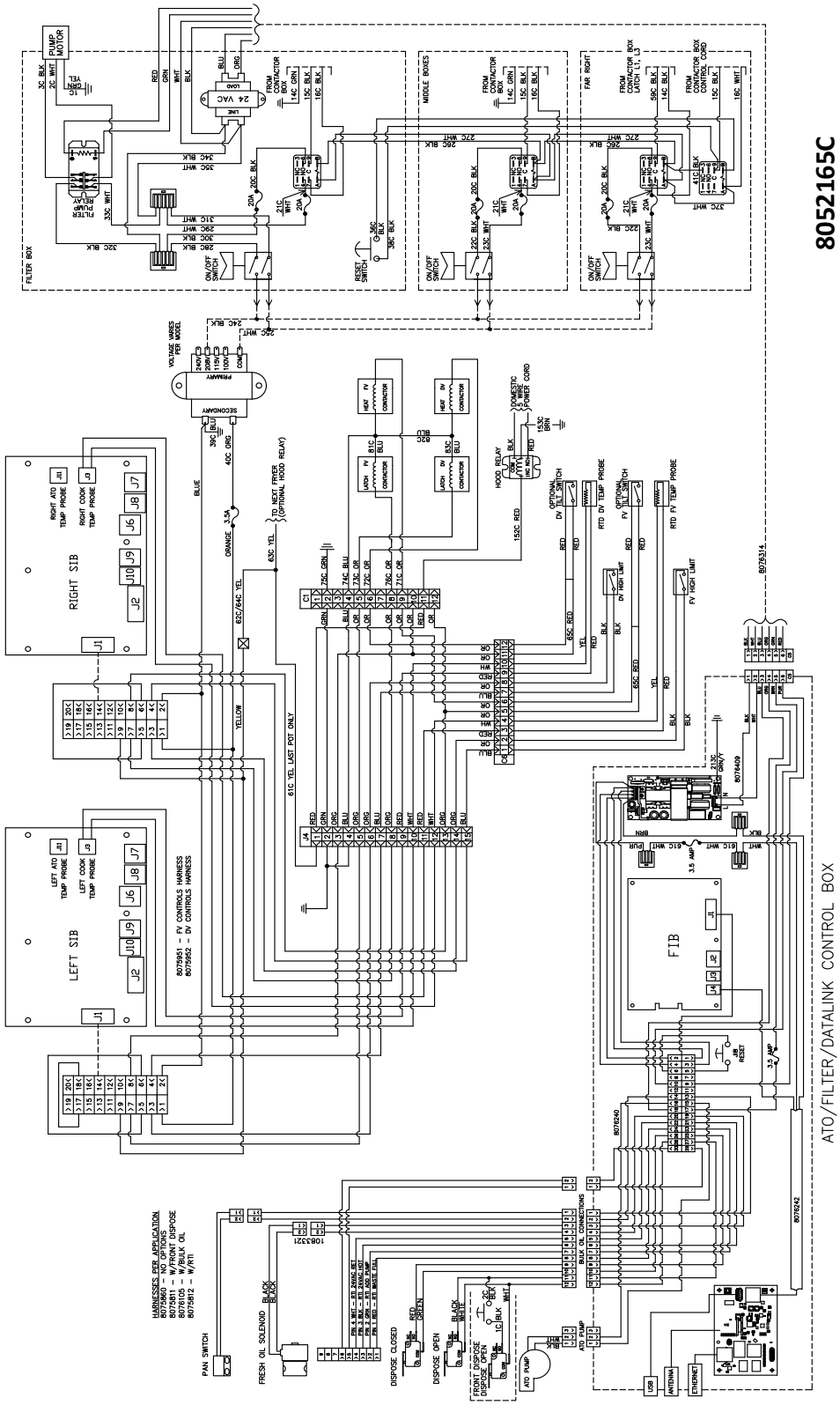

1.1.1.B BIELA14-T Series GEN III LOV™ Wiring CUL – Prior to 07/2022

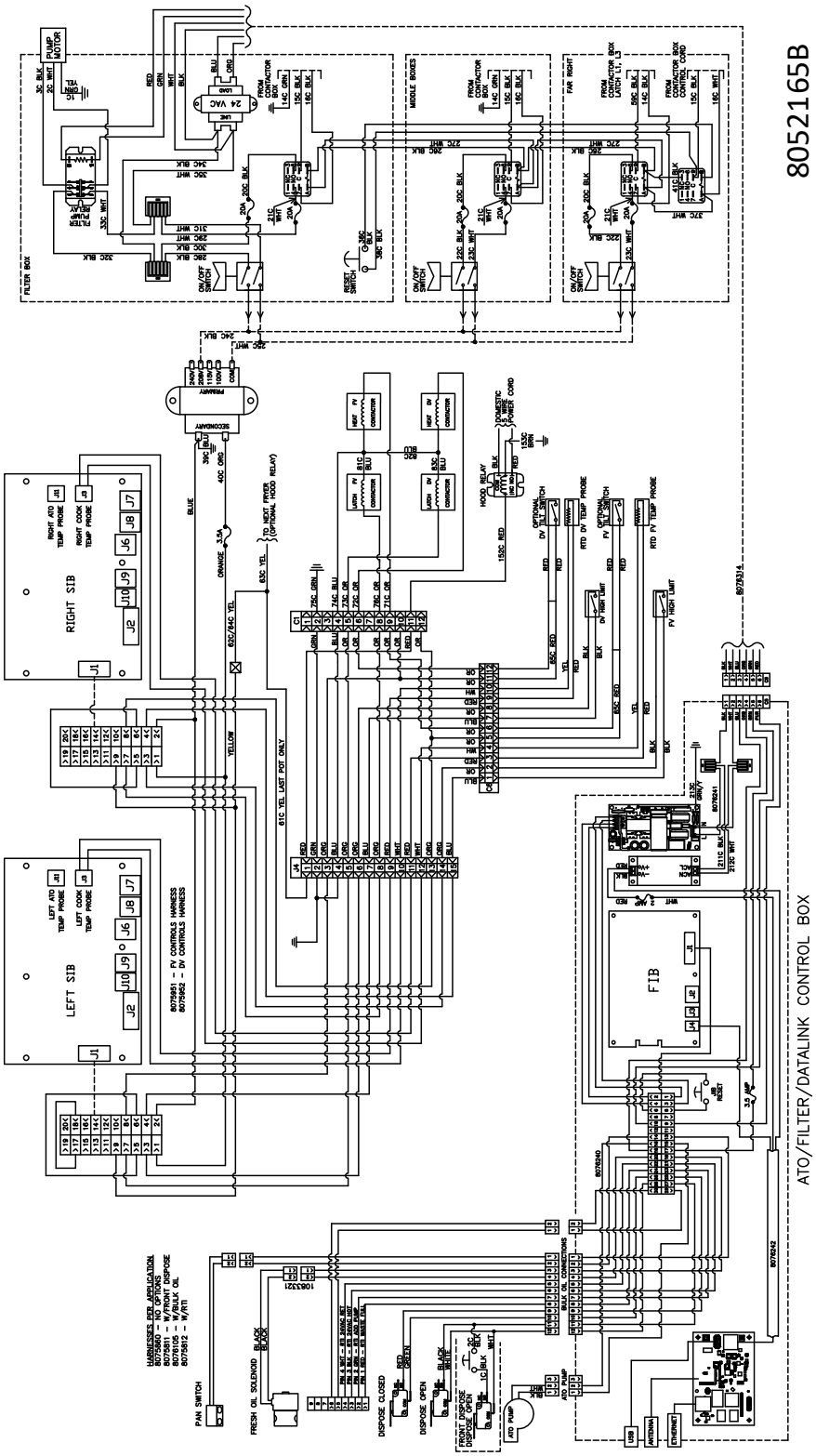

1.1.2 BIELA14-T Series GEN III LOV™ Wiring CE – Current

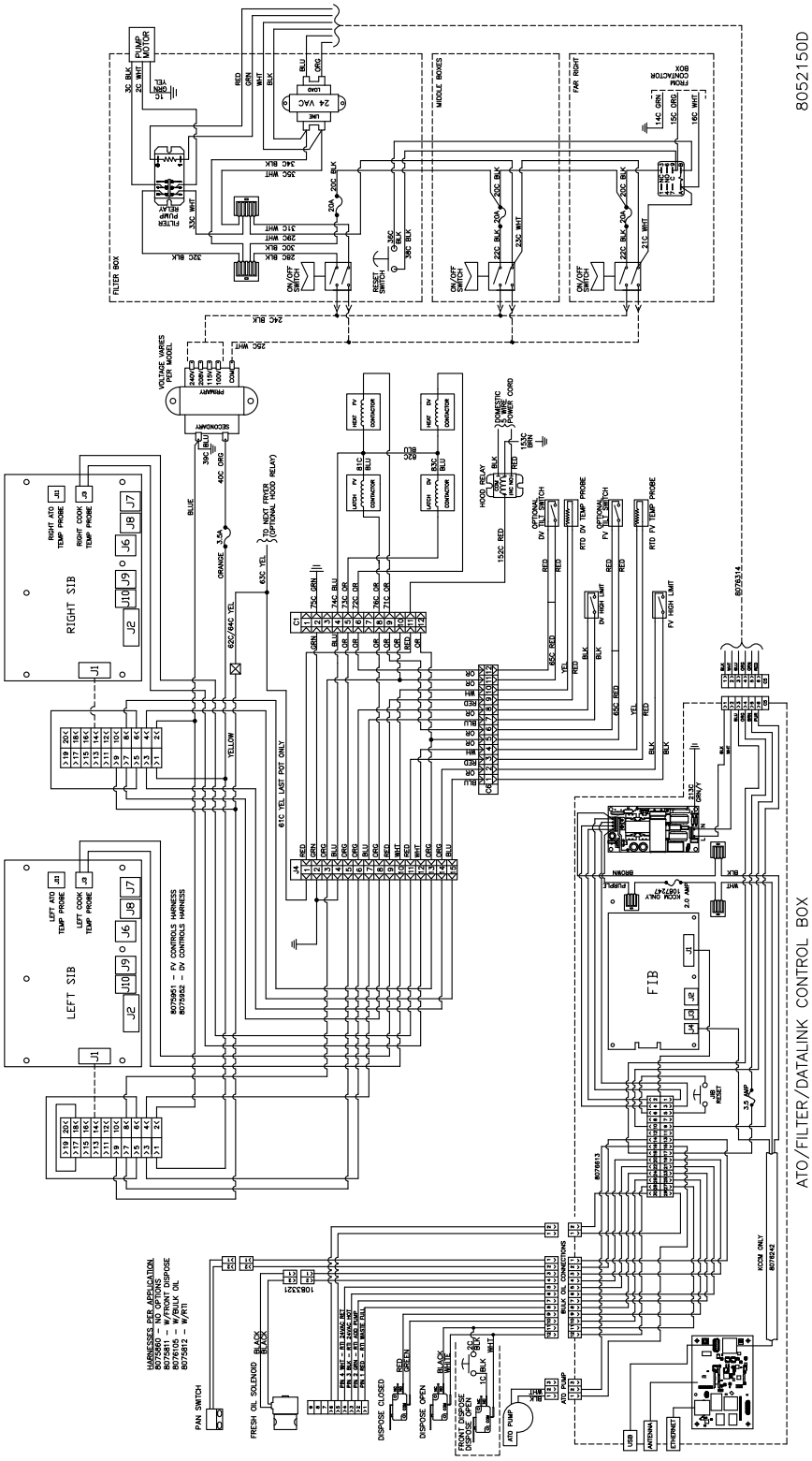

1.1.2.B BIELA14-T Series GEN III LOV™ Wiring CE – Prior to 07/2022

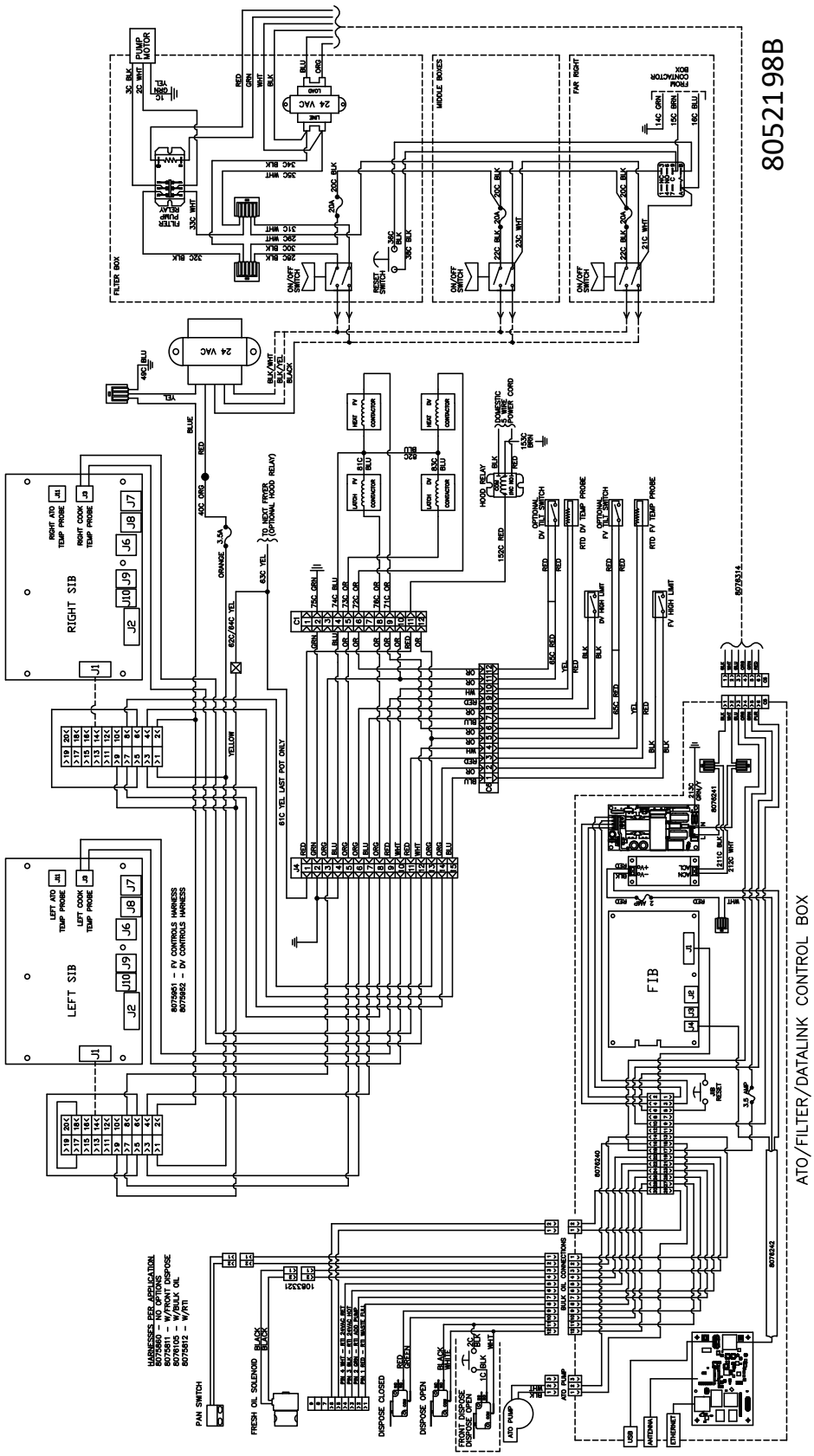

1.1.3 BIELA14-T Series GEN III LOV™ Wiring Australia - Current

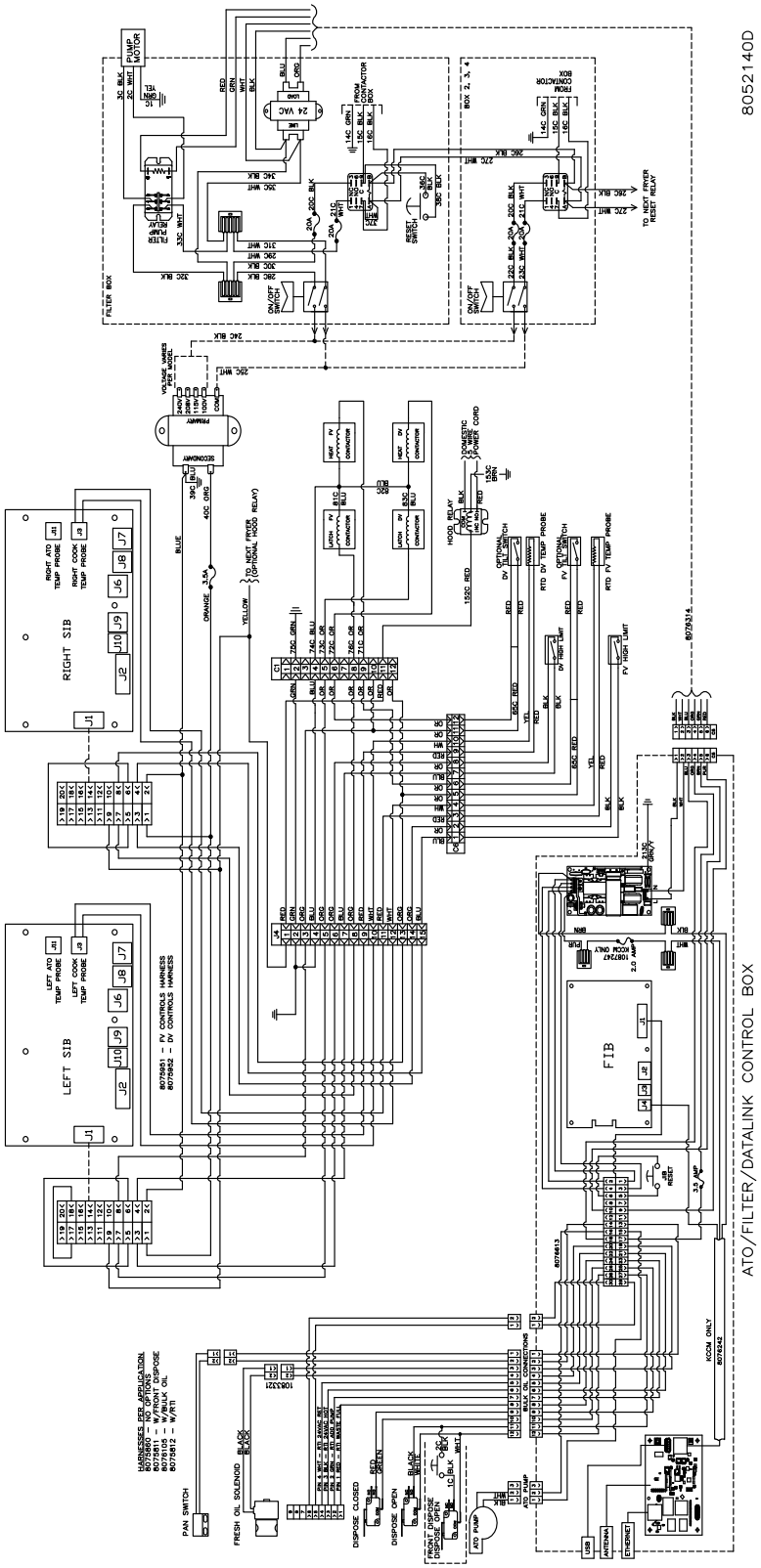

1.1.3.B BIELA14-T Series GEN III LOV™ Wiring Australia – Prior to 07/2022

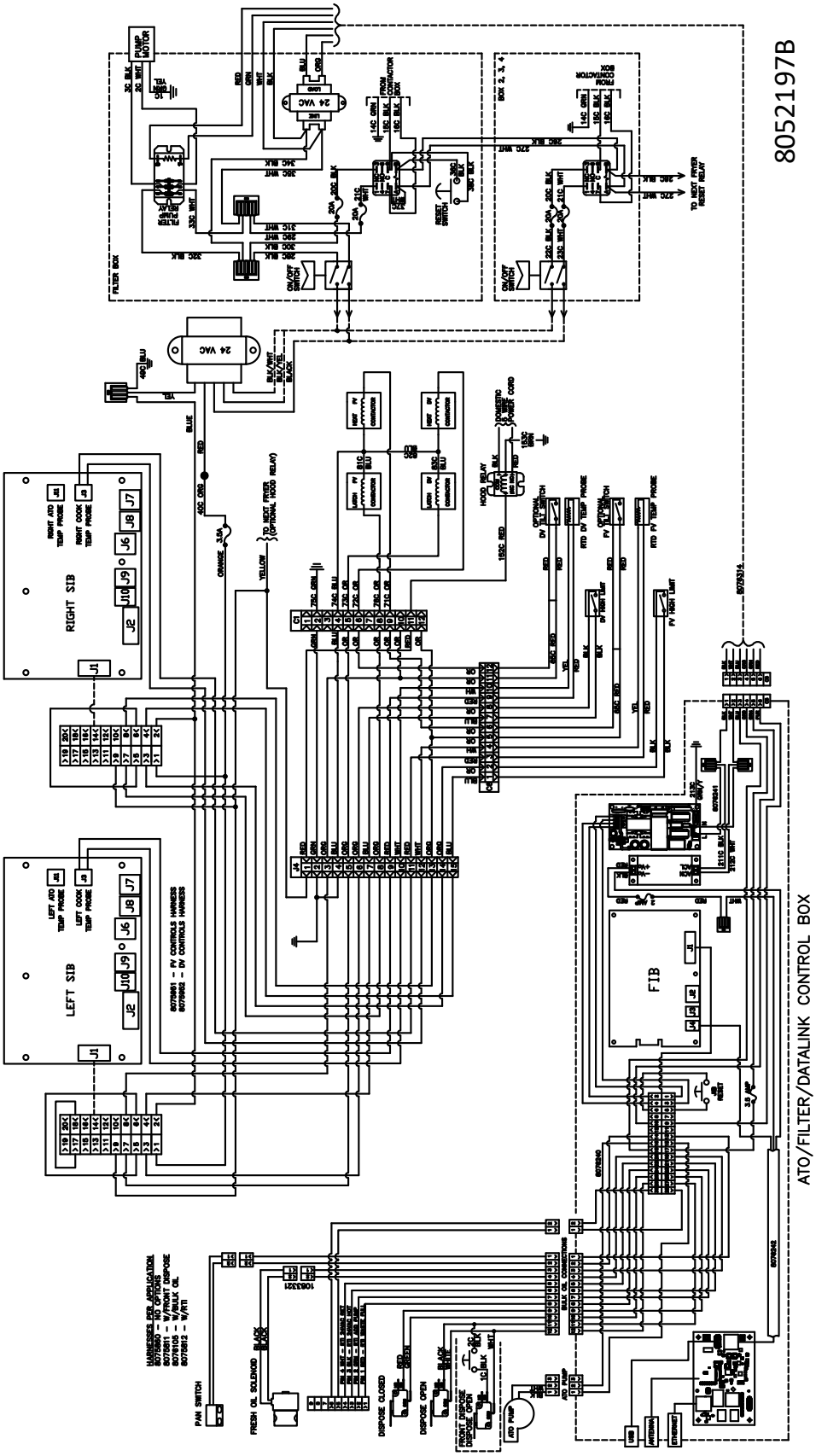

1.1.4 BIELA14-T Series GEN III LOV™ Wiring Export 208V w/208V Controls

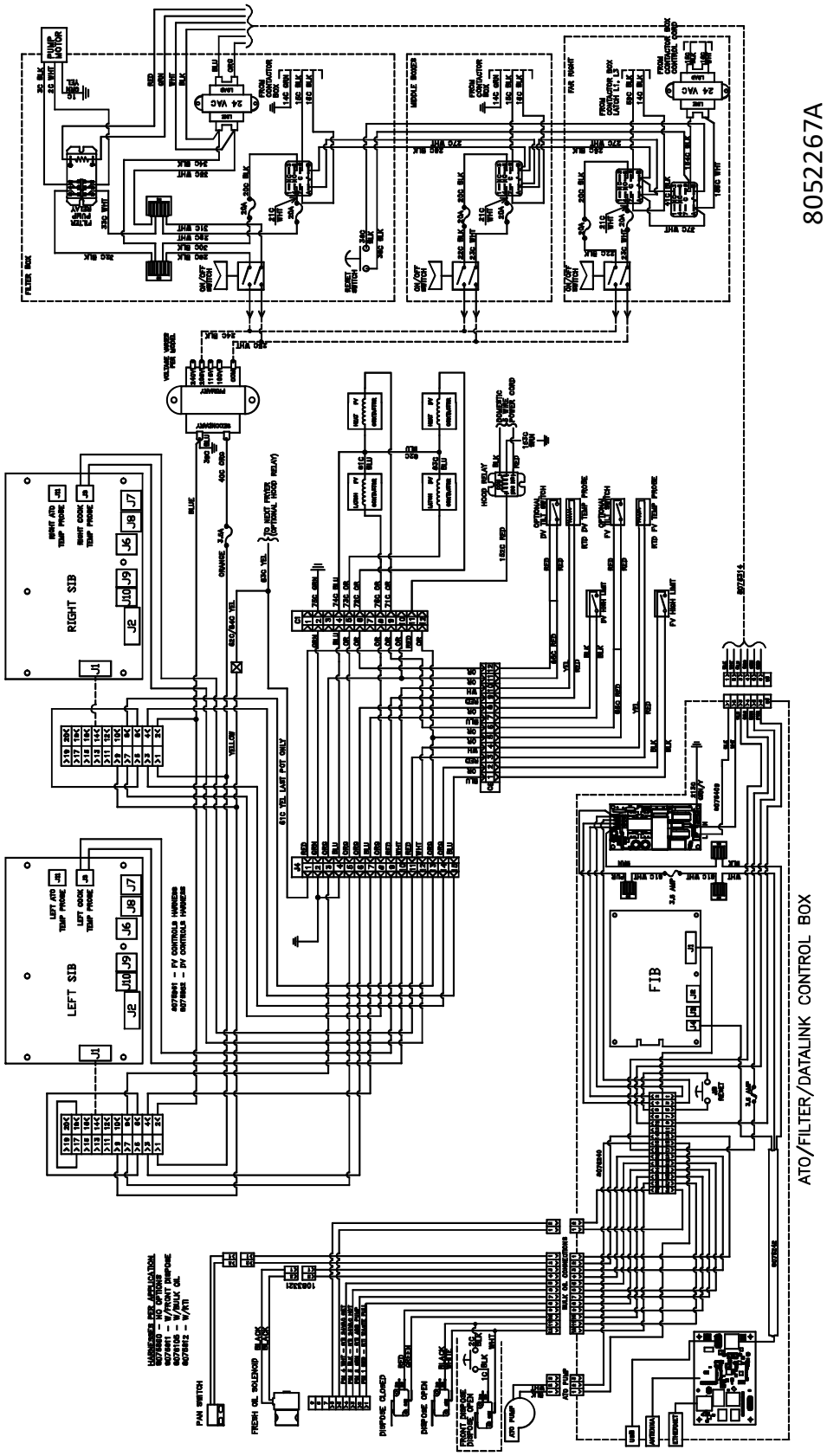

1.1.5 BIELA14-T Series GEN III LOV™ Wiring Non-CE Solid Shortening

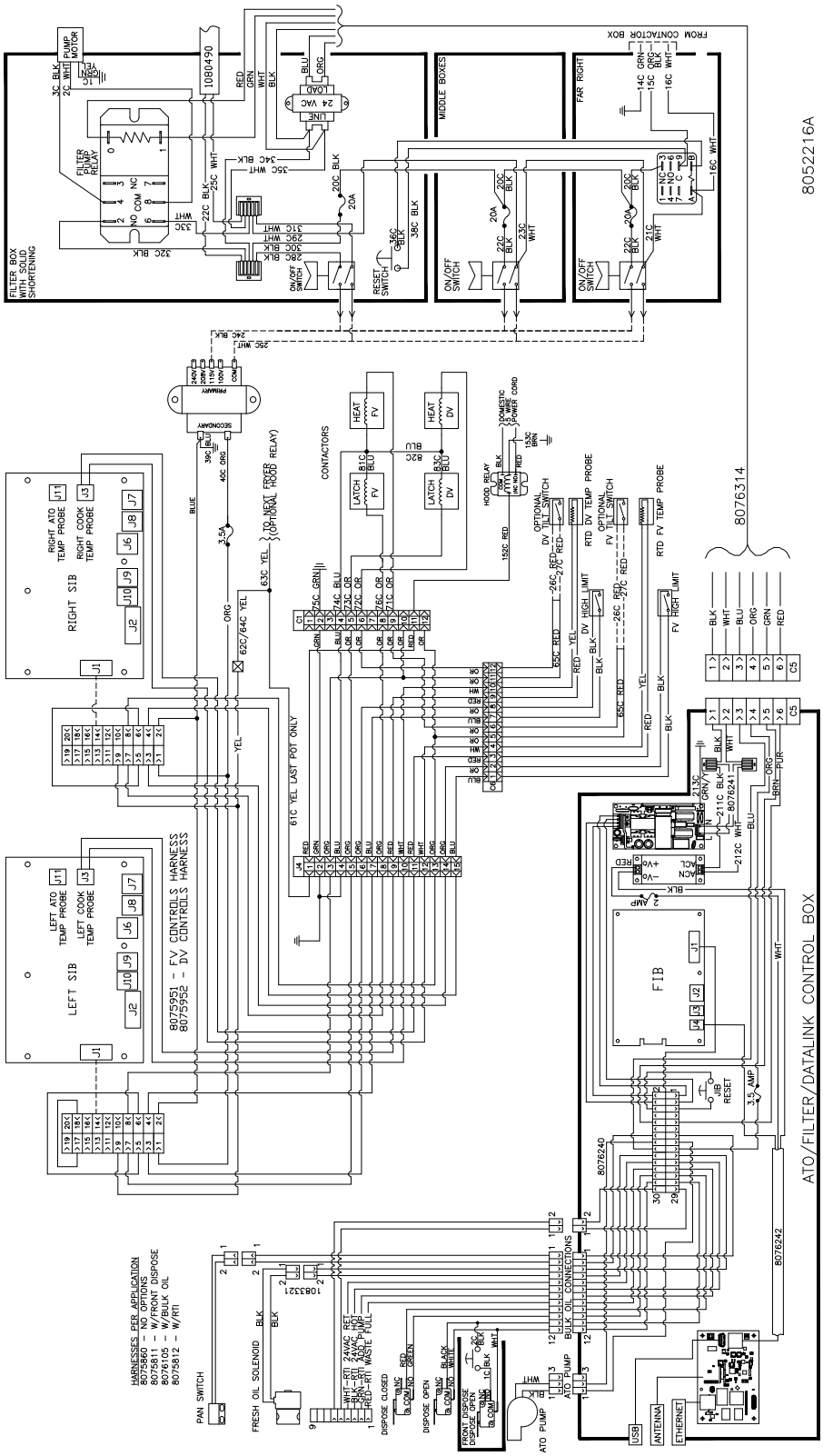

1.1.5.B BIELA14-T Series GEN III LOV™ Wiring CE Solid Shortening No Melter – Prior to 01/2024

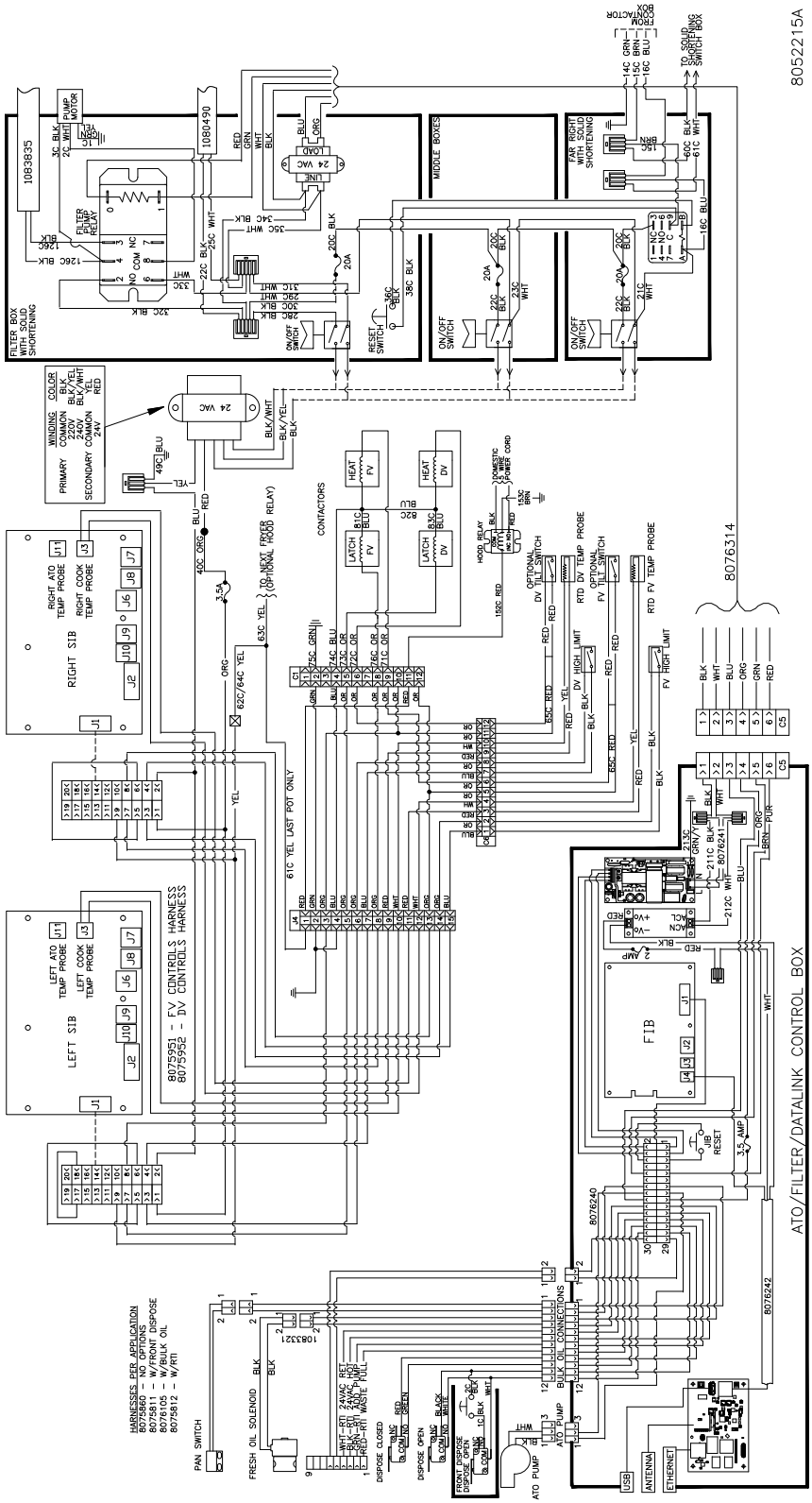

1.1.6 BIELA14-T Series GEN III LOV™ Wiring CE Solid Shortening No Melter – Current

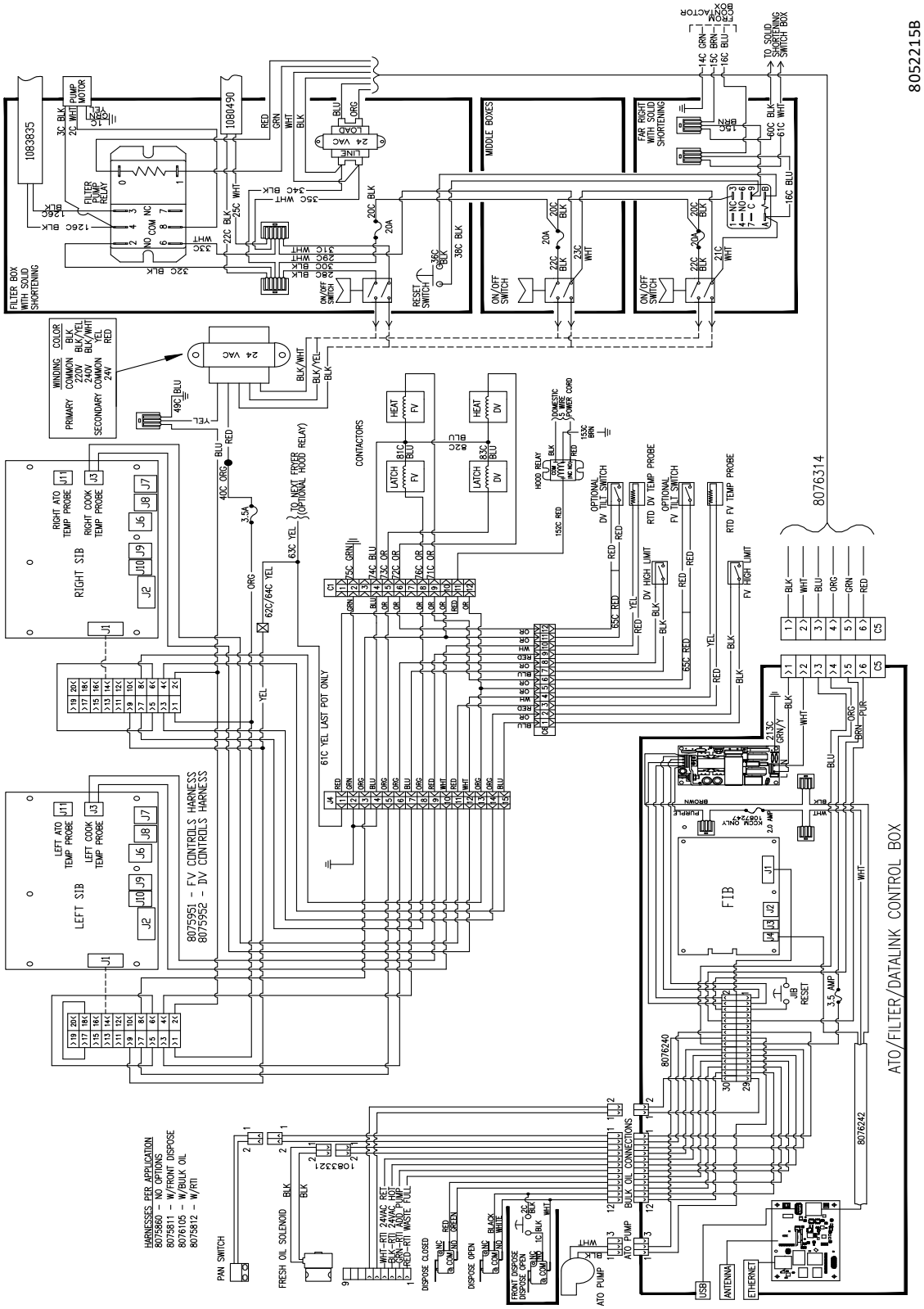

1.1.7 BIELA14-T Series GEN III LOV™ Wiring Japan 2 Battery Solid Shortening No Melter

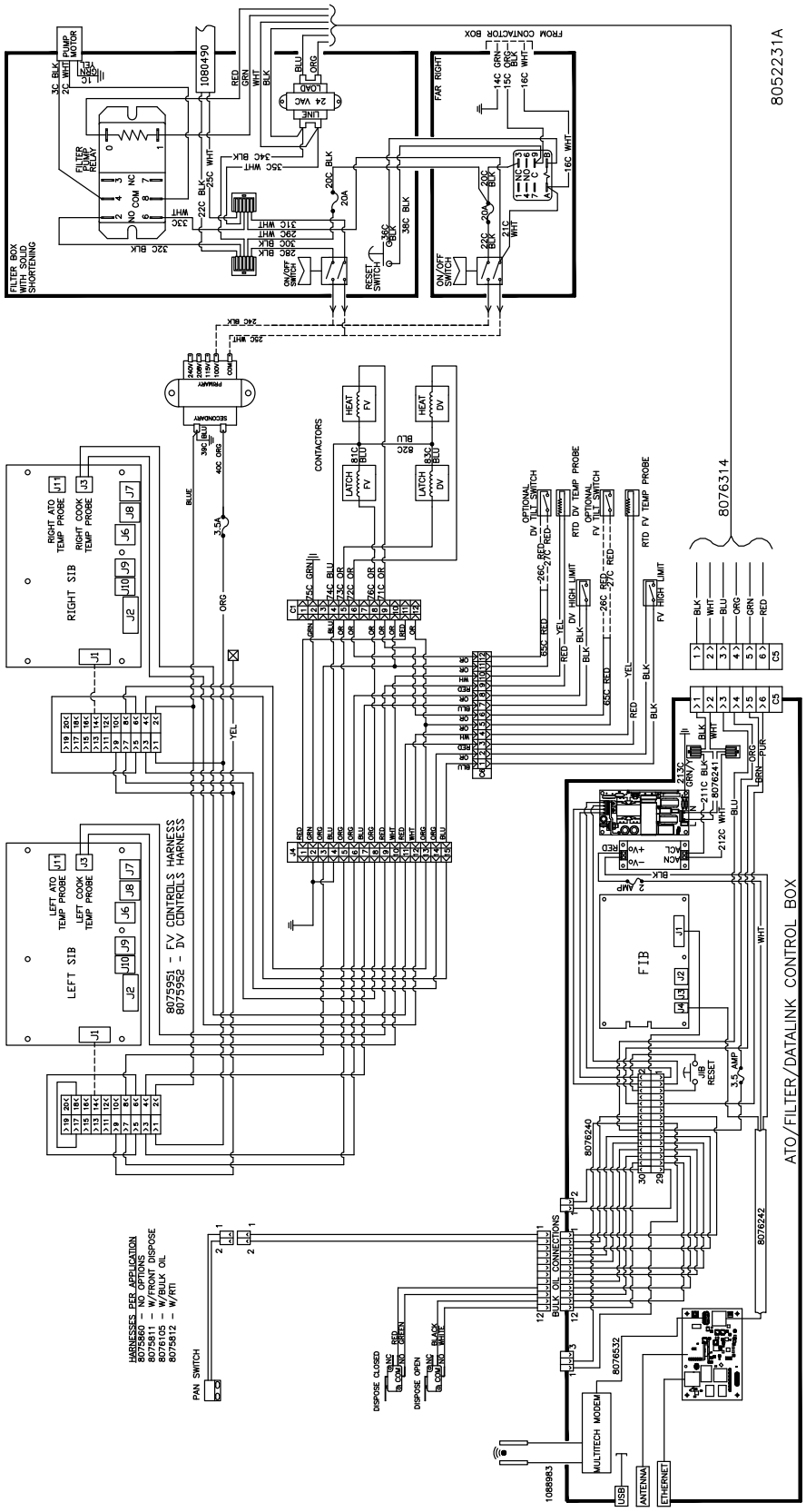

1.2 BIELA14-T Series GEN III LOV™ Simplified Communication Wiring

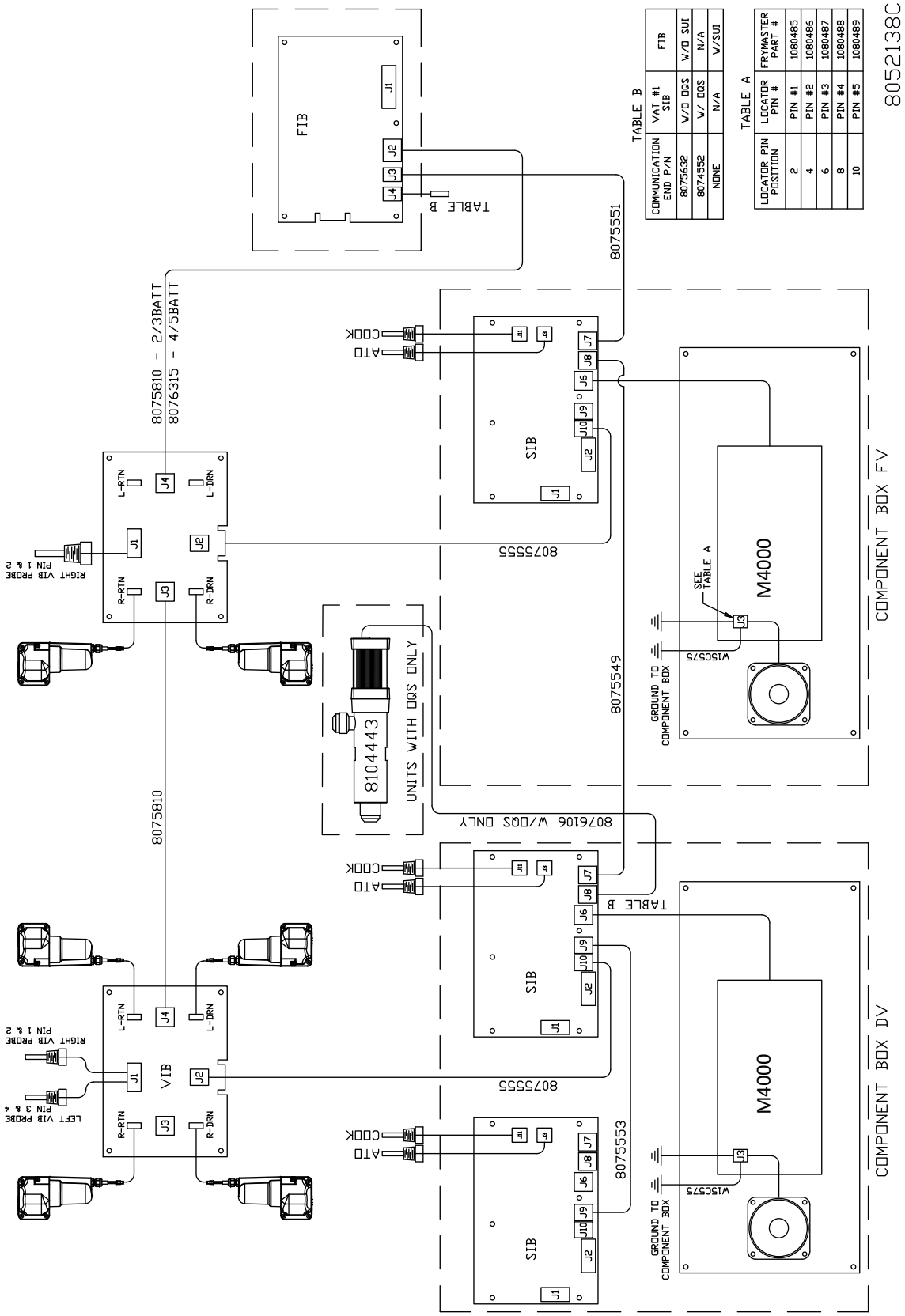

1.3 Contactor Box – Delta Configuration

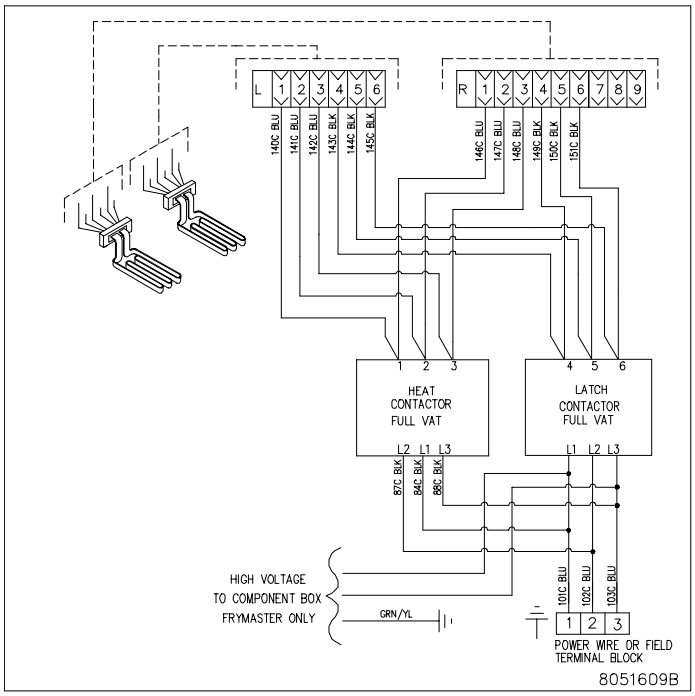

FULL VAT

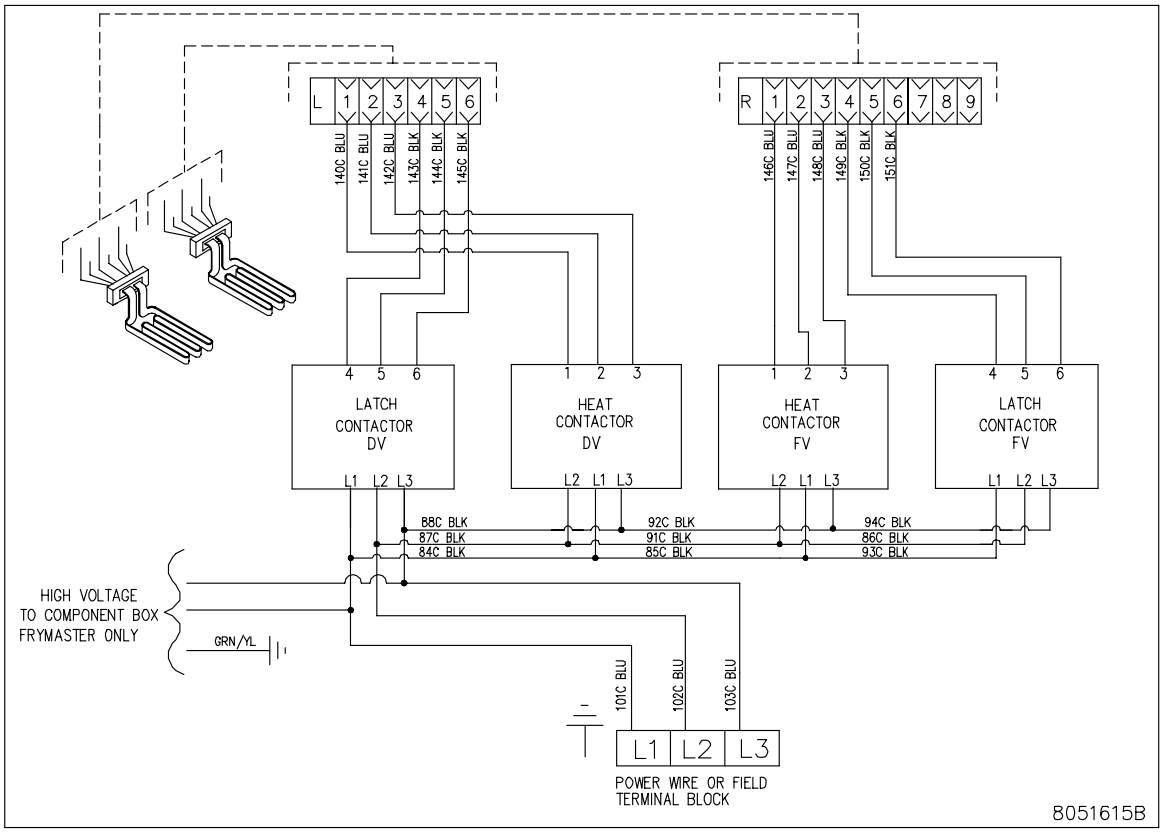

DUAL VAT

1.4 Contactor Box – WYE Configuration

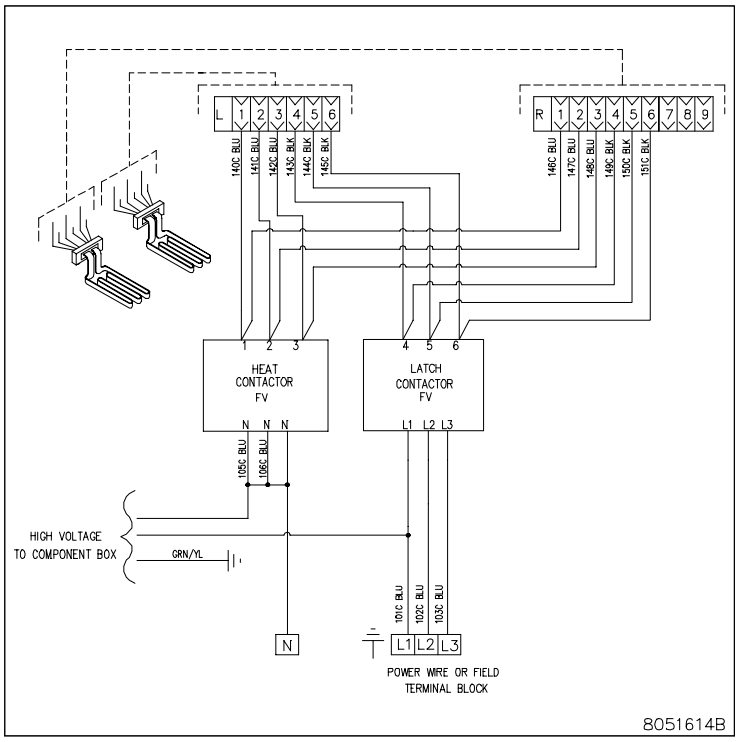

FULL VAT

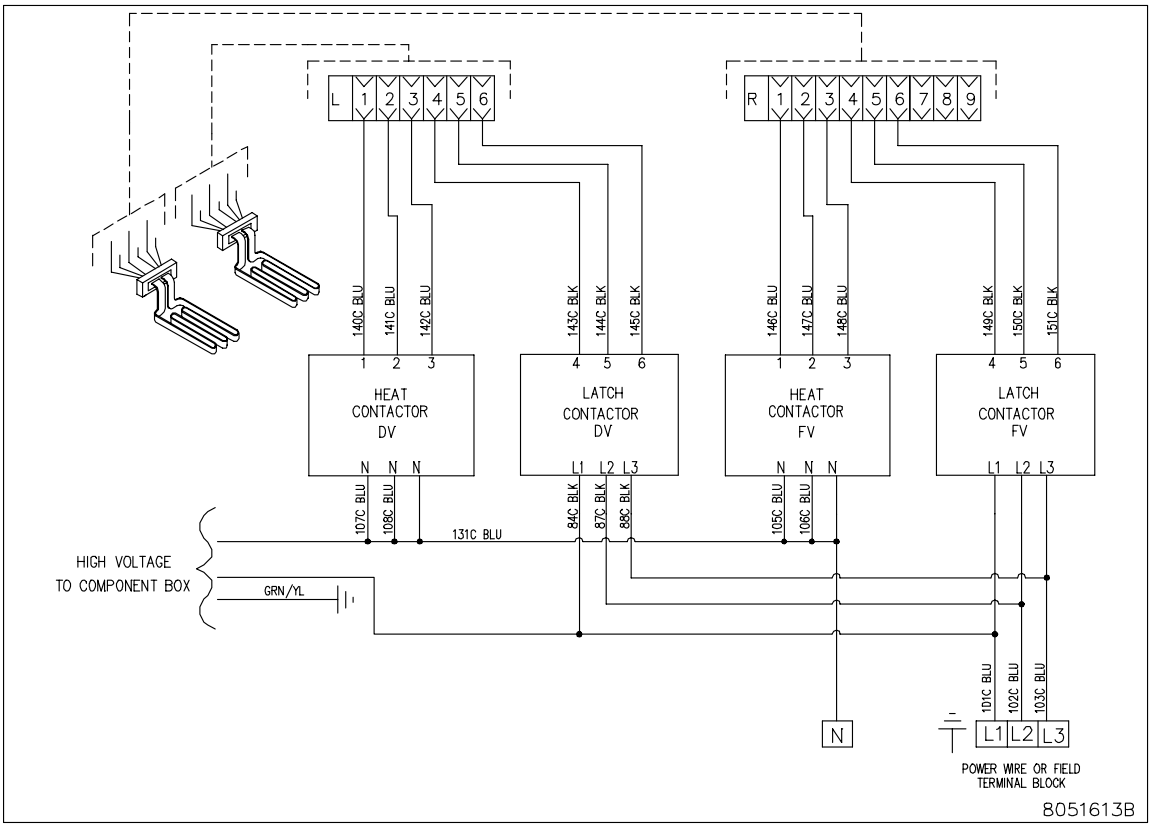

DUAL VAT

1.5 Solid Shortening Melting Unit Wiring

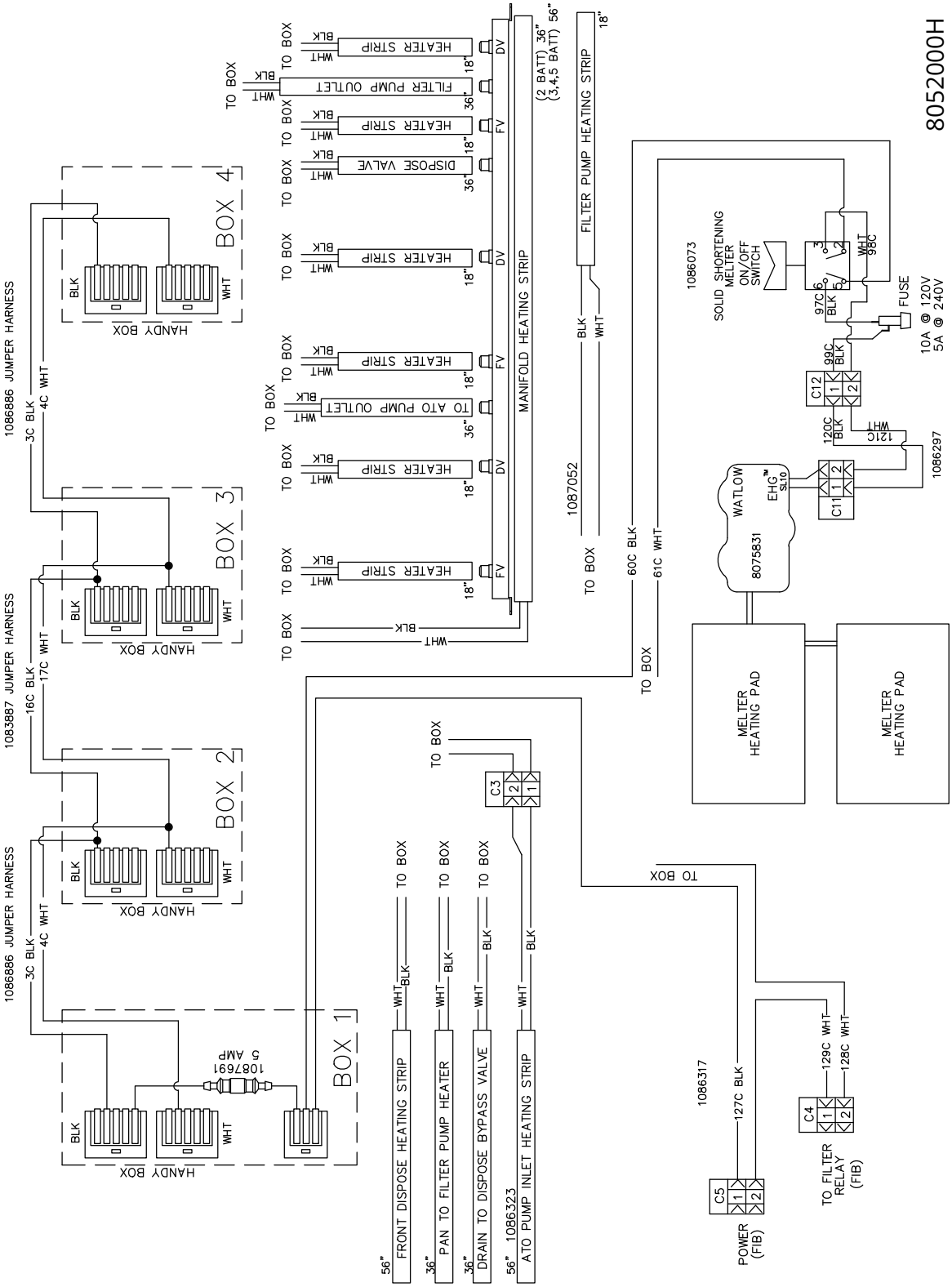

1.5.1 Solid Shortening Melting Unit Wiring (2-Battery)

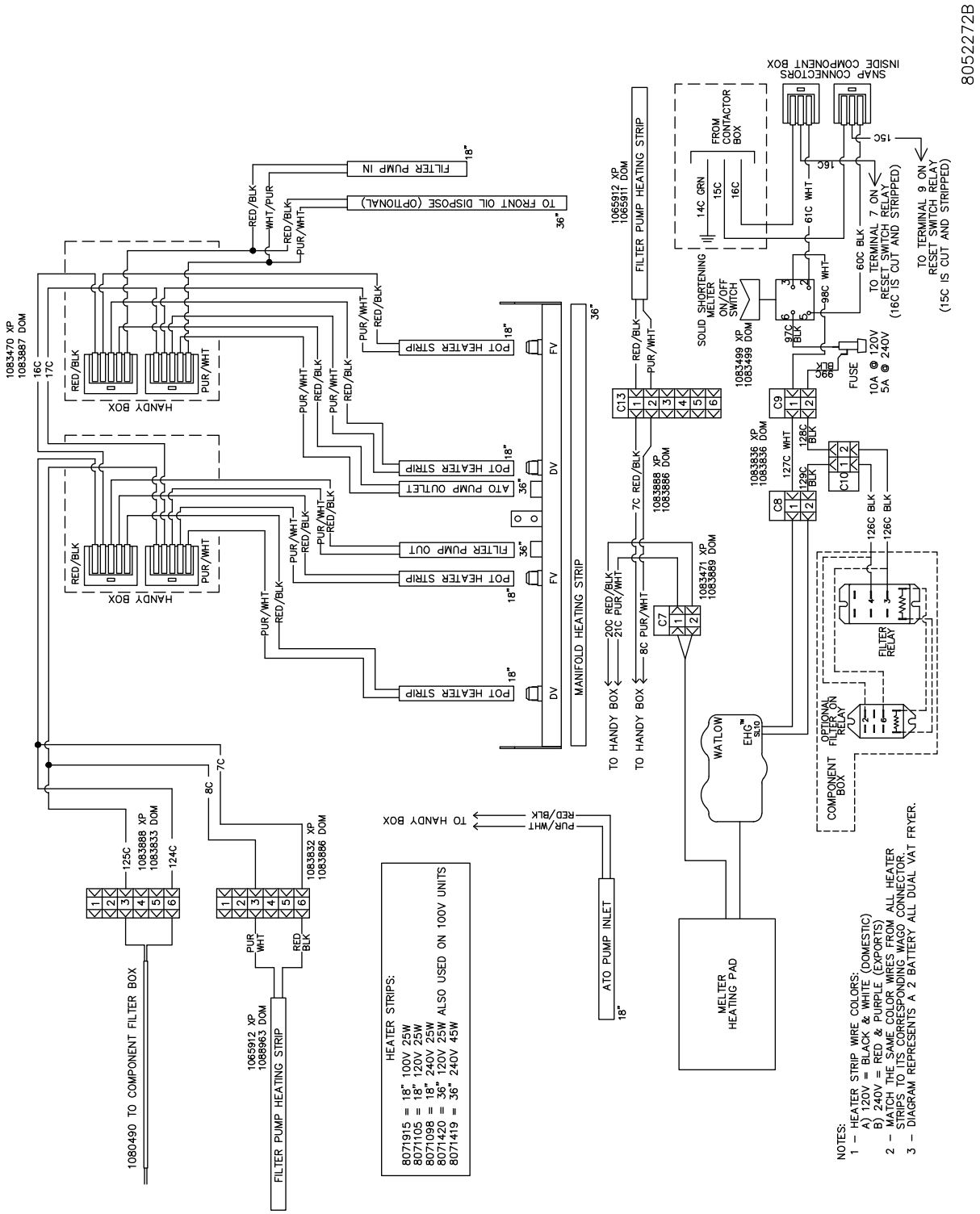

1.6 Solid Shortening Wiring No Melter International (2-Battery)

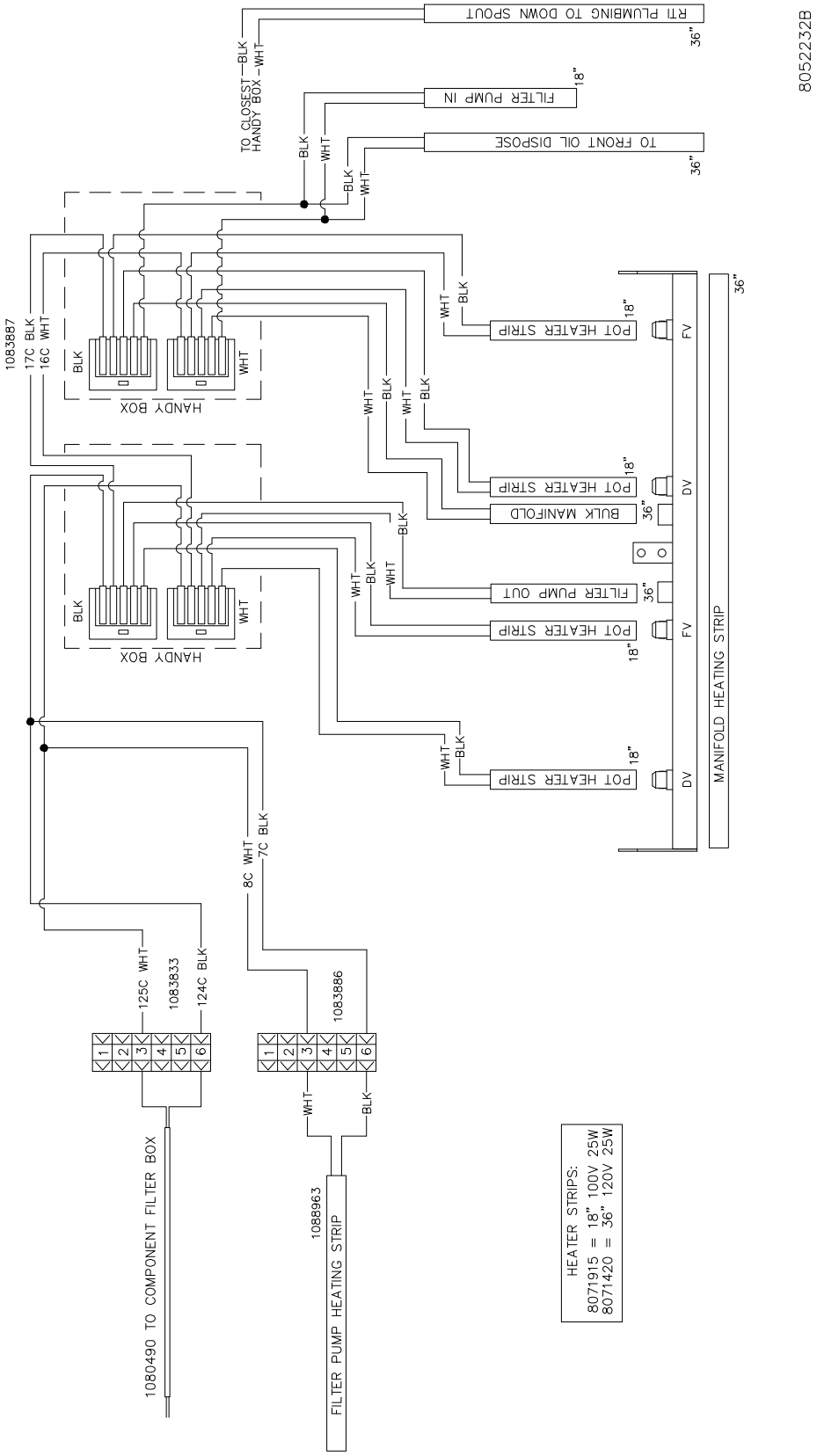

1.7 Solid Shortening Wiring No Melter International (3-Battery)

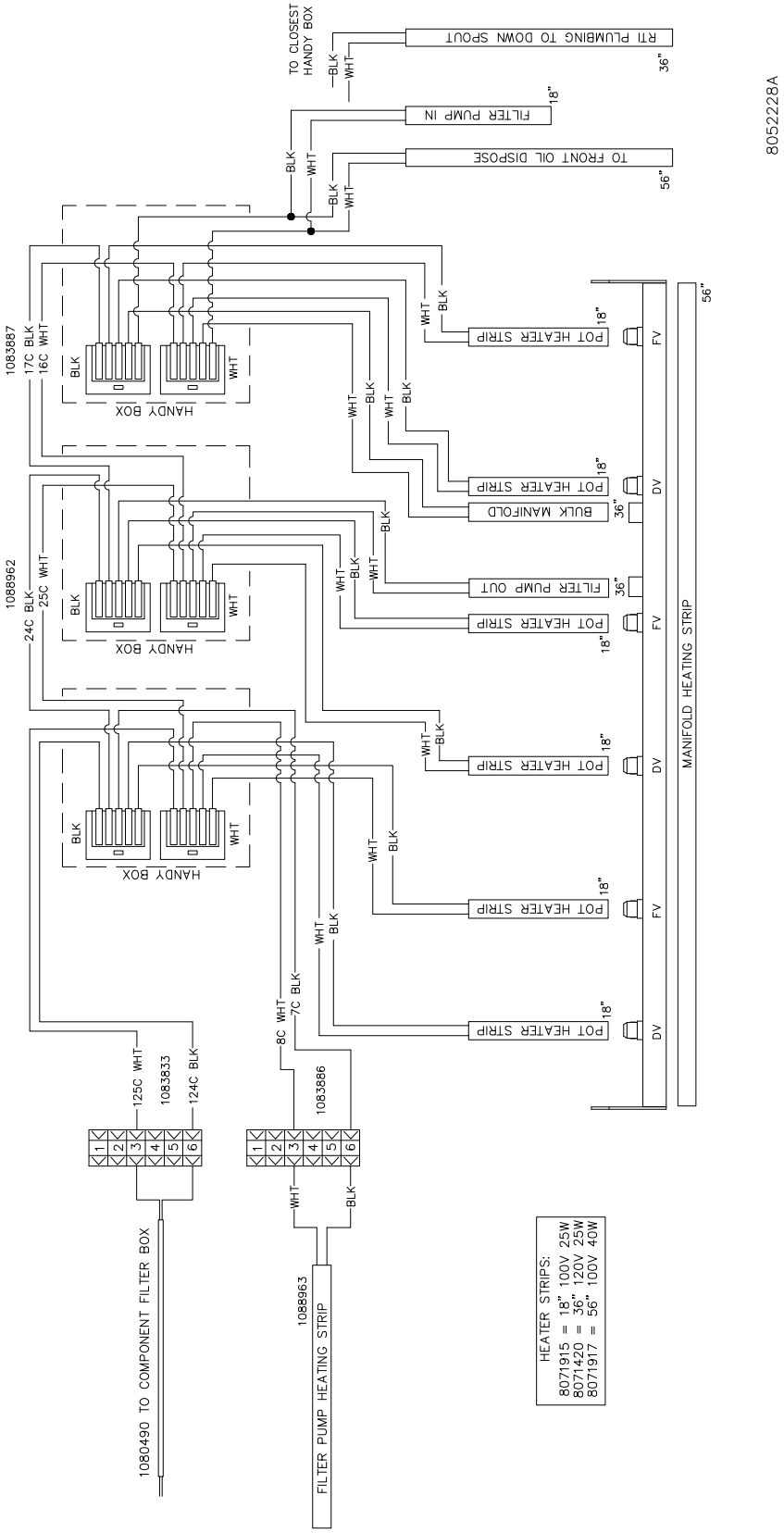

1.8 Solid Shortening Melting Unit Wiring (3-Battery)

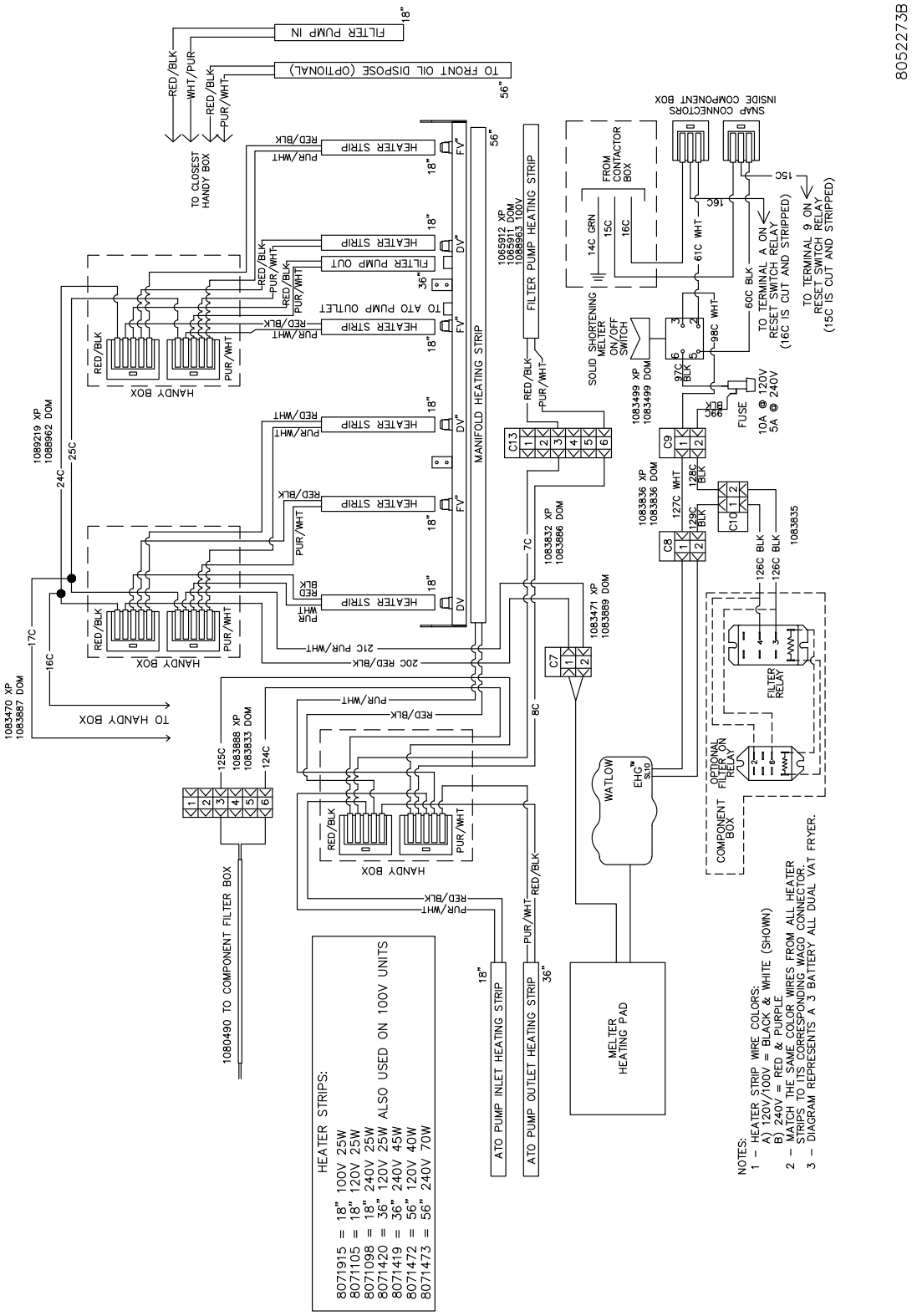

THIS PAGE INTENTIONALLY LEFT BLANK

FRYMASTER
8700 LINE AVENUE, SHREVEPORT, LA 71106-6800

800-551-8633
318-865-1711
WWW.FRYMASTER.COM
EMAIL: FRYSERVICE@FRYMASTER.COM

©2025 Frymaster LLC. except where explicitly stated otherwise. All rights reserved. Continuing product improvement may necessitate change of specifications without notice.

Part Number FRY_D_8197343 05/2025