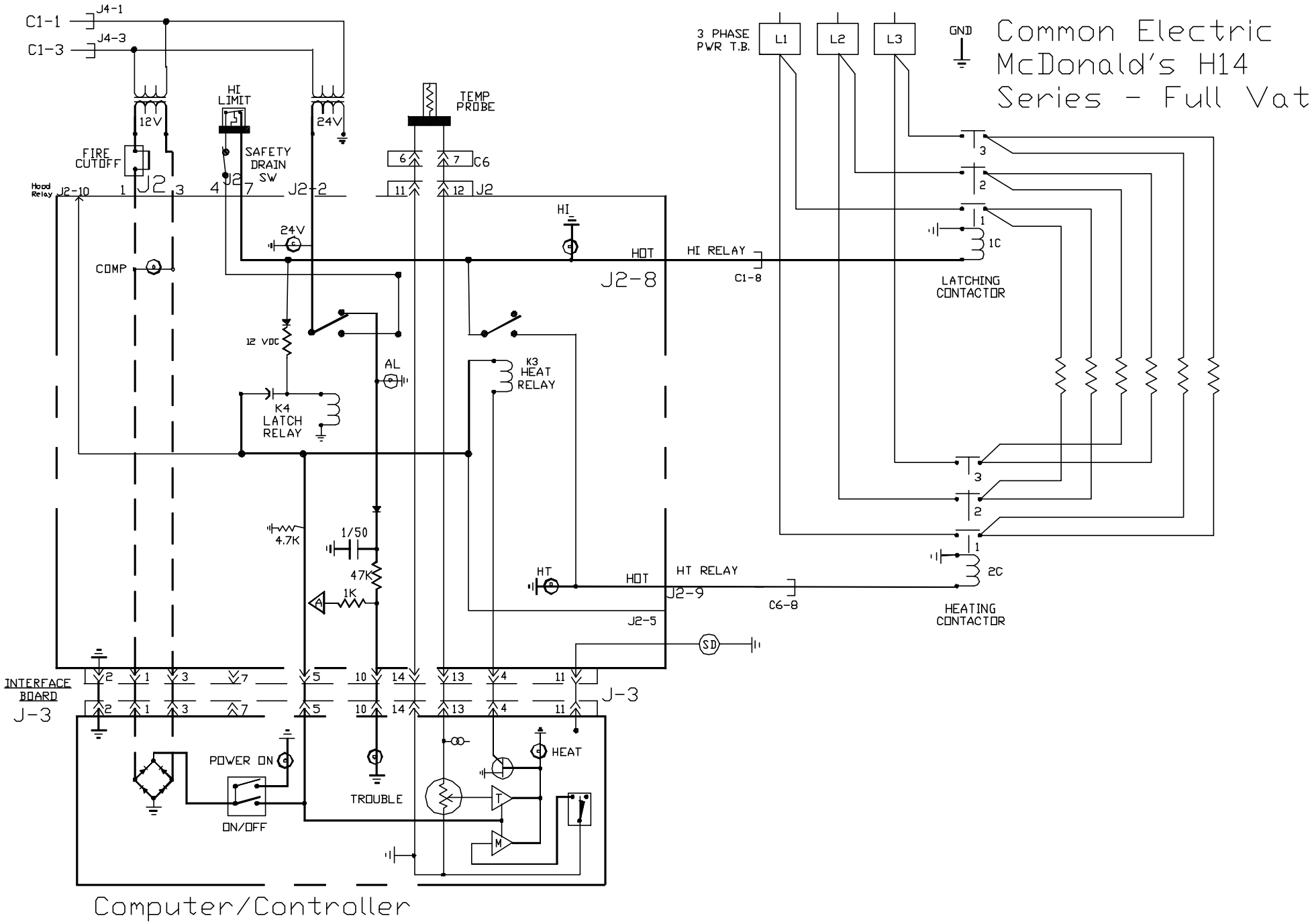
Common Electric
McDonald's H14
Series - Full Vat
C1-1
J4-1
C1-3
J4-3
12V
24V
HI LIMIT
FIRE CUTOFF
SAFETY DRAIN SW
TEMP PROBE
C6
J2
J2-2
J2-10
Hood Relay
COMP
24V
HI
HOT
J2-8
HI RELAY
C1-8
3 PHASE PWR T.B.
L1
L2
L3
GND
1C
LATCHING CONTACTOR
12 VDC
AL
K3 HEAT RELAY
K4 LATCH RELAY
4.7K
1/50
47K
1K
HT
HOT
J2-9
HT RELAY
C6-8
2C
HEATING CONTACTOR
J2-5
SD
INTERFACE BOARD
J-3
POWER ON
ON/OFF
TROUBLE
HEAT
Computer/Controller